112

2 Door 2 Drawer 500 KC Base Cabinet

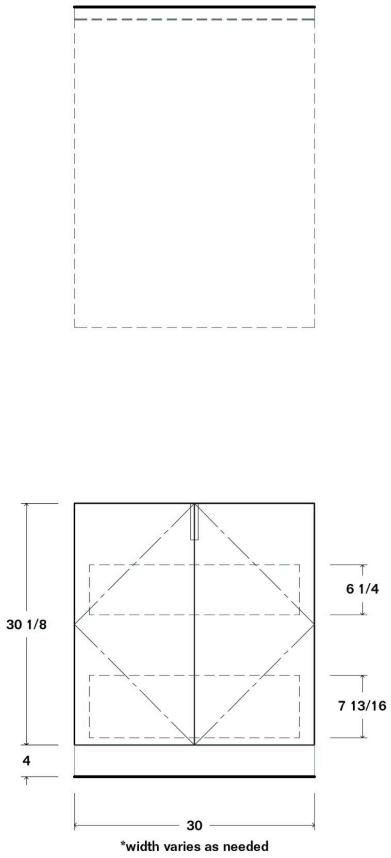

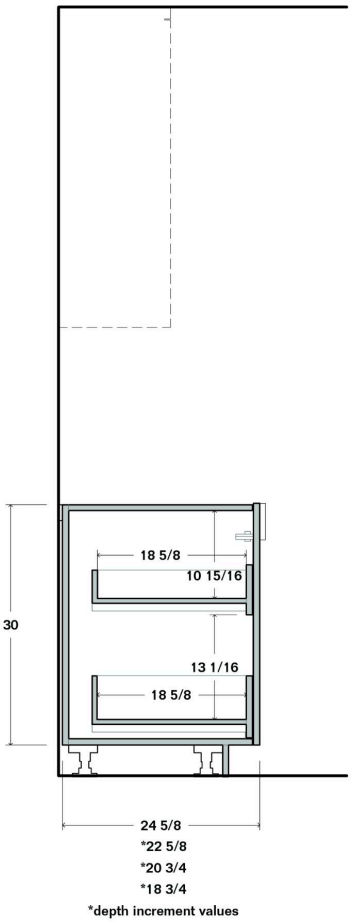

All Designs are property of **OPEN STANDARD**. Reproduction, modification, and use for construction by any party other than **OPEN STANDARD** is strictly prohibited